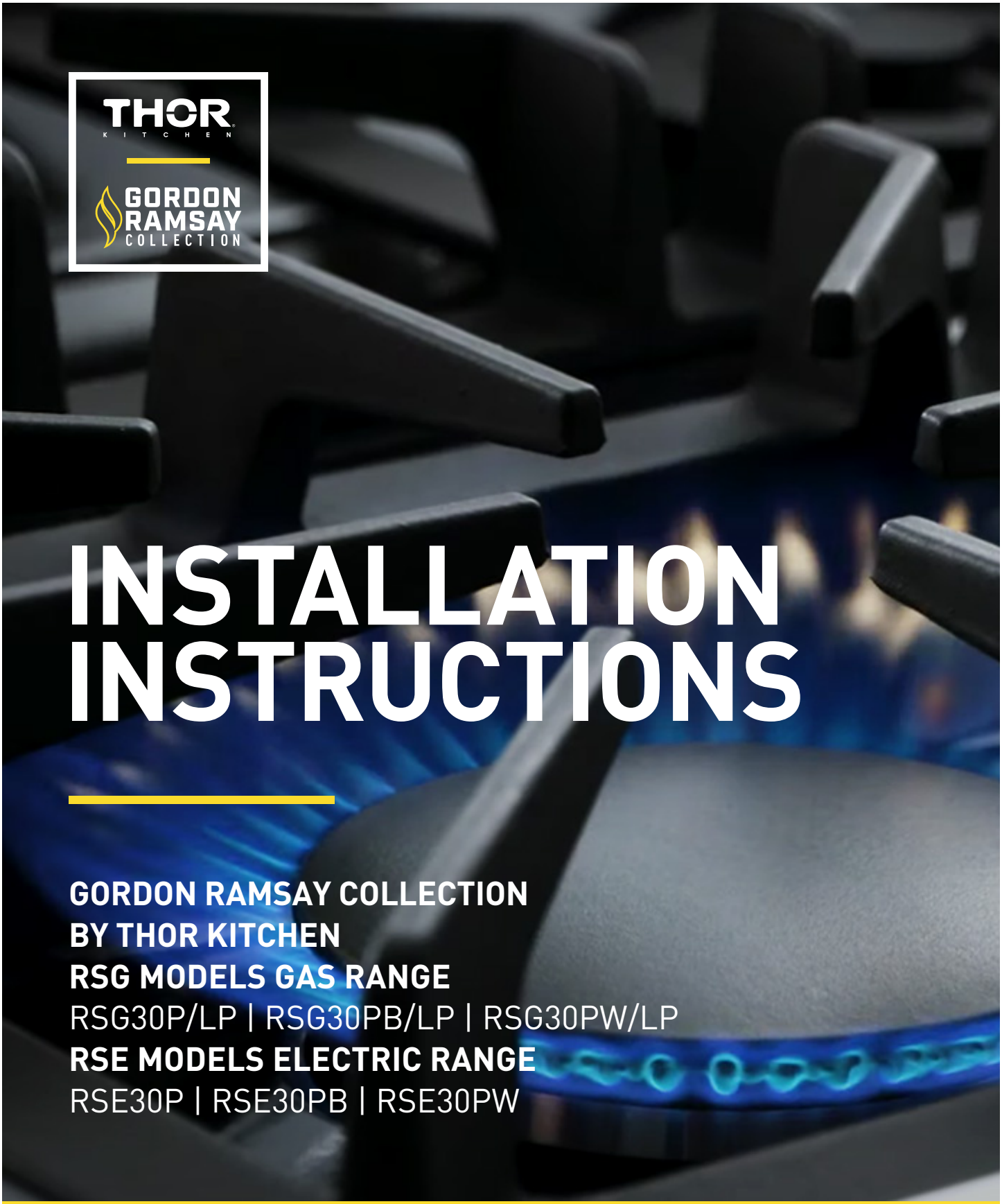

INSTALLATION INSTRUCTIONS

GORDON RAMSAY COLLECTION
BY THOR KITCHEN
RSG MODELS GAS RANGE
RSG30P/LP | RSG30PB/LP | RSG30PW/LP
RSE MODELS ELECTRIC RANGE
RSE30P | RSE30PB | RSE30PW

REV.062026

INSTALLATION INSTRUCTIONS

GORDON RAMSAY COLLECTION BY THOR KITCHEN

RSG MODELS

GAS RANGE

RSG30P/LP | RSG30PB/LP | RSG30PW/LP

RSE MODELS

ELECTRIC RANGE

RSE30P | RSE30PB | RSE30PW

THOR KITCHEN®

TABLE OF CONTENTS

IMPORTANT INSTRUCTION 2
1.1 Critical safety. 2
1.2 Signal words explanation 3
1.3 Intended use 3
1.4 IMPORTANT INSTRUCTION 4

INSTALLATION 7
2.1 Important note to the installer 7
2.2 Clearances and dimensions 7
2.3 Install the handle 11
2.4 Attach/detach the oven door 12
2.5 Attach/detach the kickplate. 14
2.6 Installation for gas models (RSG30P/LP/RSG30PB/LP/RSG30PW/LP). 15
2.7 Electrical connection for gas range (RSG30P/LP/RSG30PB/LP/RSG30PW/LP). 17
2.8 Electrical connection for electric range (RSE30P/RSE30PB/RSG30PW). 18
2.9 Install the back spacers 21
2.10 Install anti-tip device. 22
2.11 Perform a test run. 23
2.12 Conditioning prior to first time use. 23

TROUBLESHOOTING 24
WARRANTY 24

IMPORTANT INSTRUCTION

1.1 Critical safety information

WARNING: If the information in these instructions is not followed exactly, a fire or explosion can result causing property damage, personal injury, or death.

- **Do not store or use gasoline or other flammable vapors and liquids in the vicinity of this or any other appliance.**
- **WHAT TO DO IF YOU SMELL GAS:**
  - **Do not try to light any appliance.**
  - **Do not touch any electrical switch.**
  - **Do not use any phone in your building.**
  - **Immediately call your gas supplier from a neighbor's phone. Follow the gas supplier's instructions.**
  - **If you cannot reach your gas supplier, call the fire department.**
- **Installation and service must be performed by a qualified installer, service agency, or the gas supplier.**

⚠ WARNING

Never Operate the Top Surface Cooking Section of this Appliance Unattended.

- **Failure to follow this warning statement could result in fire, explosion, or burn hazard that could cause property damage, personal injury, or death.**
- **If a fire should occur, keep away from the appliance and immediately call your fire department.**

DO NOT ATTEMPT TO EXTINGUISH AN OIL/GREASE FIRE WITH WATER.

⚠ WARNING

NEVER use this appliance as a space heater to heat or warm the room. Doing so can result in carbon monoxide poisoning and overheating of the oven.

⚠ WARNING

- A child or adult can tip the appliance and be killed.
- Install the anti-tip device to the wall/floor. Verify the anti-tip device has been properly installed and engaged with the back of the appliance.
- Engage the appliance to the anti-tip device by pushing that appliance all the way into the installation location. Ensure the anti-tip device is re-engaged when the appliance is moved.
- Re-engage the anti-tip device if the appliance is moved. Do not operate the appliance without the anti-tip device in place and engaged.
- See installation instructions for details.
- Failure to do so can result in death or serious burns to children or adults.

To check the installation of the anti-tip device:

1. Remove any items on the cooktop.
2. Grasp the top rear edge of the appliance and carefully attempt to tilt it forward.
3. Verify that the anti-tip device is engaged.

1.2 Signal words explanation

The following signal words are used in this manual

⚠ DANGER	This signal word indicates a hazardous situation which, if not avoided, will result in death or serious injury.
⚠ WARNING	This signal word indicates a hazardous situation which, if not avoided, could result in death or serious injury.
⚠ CAUTION	This signal word indicates a hazardous situation which, if not avoided, could result in minor or moderate injury.
CAUTION	This signal word indicates a hazardous situation which, if not avoided, could result in property damage.
NOTICE	This signal word is a preferred signal word to address tips and practices not related to personal injury.

1.3 Intended use

- This appliance is intended for cooking and preparing food.
- This appliance is intended for household use only.
- This appliance is intended to be used in dry indoor areas only.
- Only use the appliance as mentioned in this manual. Any other use is considered improper and may result in damage to property or injury to persons.
- Potential injury from improper use.
- The manufacturer or vendor cannot be held liable for damages or injury incurred through improper or incorrect use.

IMPORTANT INSTRUCTION

1.4 IMPORTANT INSTRUCTION

For all models

This installation instructions is part of this appliance, and contains important information on setup and use. Read this manual carefully, especially the **IMPORTANT INSTRUCTION chapter**, before using the appliance. Failure to do so may result in personal injury and/or damage to the appliance.

- Keep this manual for future use and reference. Make sure to include this manual when passing the appliance on to third parties. If you require a digital copy of this manual, please contact customer service.
- The appliance must be installed in accordance with local codes. In the absence of local codes, follow ANSI Z223.1/NFPA 54 standards in the U.S. or CSA B149.1 in Canada.
- It is recommended to electrically ground the appliance during installation in accordance with local codes. If local codes are not available, follow NFPA 70 or CSA C22.1 standards in Canada.
- The ventilation area is located at the back of the appliance. The back of the appliance should not be in direct contact with a wall/surface. Install the back spacers to the back of the appliance to maintain a proper area for ventilation.
- In the event of a power failure, do not attempt to use the appliance. If the power fails, always turn the oven off. If the oven is not turned off and the power returns, the oven my begin to operate again. Food left unattended could catch fire or spoil.
- The maximum depth of cabinets installed above the cooktop is 13" (33 cm).
- Seal any openings in the wall behind the appliance and in the floor under the appliance.
- If there is a cabinet above the appliance, install a noncombustible material on the bottom if that cabinet in accordance with local codes. If local codes are not available, follow ANSI Z223.1/NFPA 54 or, CSA B149.1. in Canada
- Proper Installation - Be sure your appliance is properly installed and grounded by a qualified technician.
- Never Use Your Appliance for Warming or Heating the Room.
- Do Not Leave Children Alone - Children should not be left alone or unattended in area where appliance is in use. They should never be allowed to sit or stand on any part of the appliance.
- Wear Proper Apparel - Loose-fitting or hanging garments should never be worn while using the appliance.
- User Servicing - Do not repair or replace any part of the appliance unless specifically recommended in the manual. All other servicing should be referred to a qualified technician.
- Storage in or on Appliance - Flammable materials should not be stored in an oven or near surface units.
- Do Not Use Water on Grease Fires - Smother fire or flame or use dry chemical or foam-type extinguisher.
- Use Only Dry Potholders - Moist or damp potholders on hot surfaces may result in burns from steam. Do not let potholder touch hot heating elements. Do not use a towel or other bulk cloth.
- Use Proper Pan Size - The appliance is equipped with one or more surface units of different size. Select utensils having flat bottoms large enough to cover the surface unit heating element. The use of undersized utensils will expose a portion of the heating element to direct contact and my result in ignition of clothing. Proper relationship of utensil to burner will also improve efficiency.

IMPORTANT INSTRUCTION

- Never Leave Surface Units Unattended at High Heat Settings - Boilover can cause smoke and greasy spillovers that may ignite.
- Protective Liners - Do not use aluminum foil to line the surface of cooktop drip pan or oven bottoms. Improper installation of these liners may result in a risk of electric shock, fire or damage to the porcelain surface.
- Glazed Cooking Utensils - Only specific types of glass, glass-ceramic, ceramic, earthenware, or other glazed utensils are suitable for use on the cooktop, as they may break from sudden temperature changes.
- Utensil Handles Should Be Turned Inward and Not Extend Over Adjacent Surface units - To reduce the risk of burns, ignition of flammable materials, and spillage due to unintentional contact with the utensil, the handle of a utensil should be positioned so that it is turned inward, and does not extend over adjacent surface units.
- Use Caution When Opening Door - Let hot air or steam escape before removing or replacing food.
- Do Not Heat Unopened Food Containers - Build-up of pressure may cause container to burst and result in injury.
- Keep Oven Exhaust Vent Unobstructed.
- Placement of Oven Racks - Always place oven racks in the desired position while the oven is cool. If moving a rack while the oven is hot, ensure potholders do not touch the heating elements.
- Do Not Clean Door Gasket - The door gasket is essentials for a good seal. Care should be taken not to rub, damage, or move the gasket.
- Do not use a protective coating to line the oven and do not use commercial oven cleaner unless Certified for use in a self cleaning oven.
- Clean only the parts as suggested in the manual.
- DO NOT TOUCH SURFACE UNITS OR AREAS NEAR SURFACES UNITS - Surface units may be hot even though they are dark in color. Areas near surface units may become hot enough to cause burns. During and after use, do not touch, or let clothing or other flammable materials contact surface units or areas near units until they have had sufficient time to cool. Among these areas are the surrounding areas of cook-top, drip-pan, burners and cooking grates.
- DO NOT TOUCH INTERIOR SURFACES OF OVEN - Interior surfaces of an oven become hot enough to cause burns. During and after use, do not touch, or let clothing or other flammable materials contact the interior surfaces of oven until they have had sufficient time to cool. Other surface of the appliance may become hot enough to cause burns - among these surface are oven vent openings and surfaces near these openings, oven doors, and windows of oven doors.

⚠ CAUTION **Risk of fire and damage!** Do not leave food or cooking utensils, etc., in oven during the pyrolytic self cleaning mode of operation. Remove all items from the oven prior to initiating the cleaning cycle. Before initiating the cleaning cycle, wipe off all excessive spillage, food residue or debris that could potentially ignite. Maintain a safe distance from the appliance during the cleaning cycle and avoid placing any flammable items or materials near the appliance.

⚠ CAUTION **Risk of injury!** Do not store items of interest to children in cabinets above a appliance or on the backguard of a appliance - children climbing on the appliance to reach items could be seriously injured.

IMPORTANT INSTRUCTION

WARNING

This appliance contains chemicals known to the State of California to cause cancer and/or reproductive harm, and birth defects or other reproductive harm. For more information go to www.P65Warnings.ca.gov.

For gas appliances only (RSG30P,RSG30PB)

- Line Pressure Testing Above 1/2 psi (3.5kPa): The range and its individual shutoff valve must be disconnected from the gas supply piping system during any pressure testing of that system at test pressures in excess of 1/2 psi (3.5 kPa).
- Line pressure testing equal or less than 1/2 psi (3.5 kPa): The range must be isolated from the gas supply piping system by closing its individual manual shutoff valve during any pressure testing of the gas supply piping system at test pressures equal to or less than 1/2 psi (3.5 kPa).
- The appliance should not be installed with a ventilation system that blows air downward toward the appliance. This type of ventilation system may cause ignition and combustion problems with the gas cooking appliance resulting in personal injury or unintended operation.
- Do not use an air curtain or other overhead appliance hood (equipment that operates by blowing a downward airflow onto a appliance) in conjunction with a gas appliance unless the hood and appliance have been designed and tested in accordance with ANSI Z21.1 or CSA 1.1, and designed and tested for combination use.
- The maximum gas supply pressure, test pressure and the supplied pressure regulator setting of the gas appliance supplied are as follows:

	LP (Liquid Propane) in wc	NG (Natural gas) in wc
Maximum gas supply pressure	13.0	10.0
Test pressure	⩾11.0	⩾6.0
Appliance pressure regulator setting for outlet pressure	10.0	5.0

- Leak testing of the appliance shall be conducted in accordance with these instructions .
- A manual valve has to be installed in an accessible location in the gas piping external to the appliance for the purpose of turning on or shutting off the gas supply to the appliance.

COMMONWEALTH OF MASSACHUSETTS

- Installations and repairs must be performed by a qualified or licensed contractor, plumber, or gas fitter, qualified or licensed by the state, province, or region where this appliance is being installed.
- Use only gas shut-off valves approved for use within the state, province, or region where this appliance is being installed.
- A flexible gas connector, when used, must not exceed 3' (0.9 m).

For electrical appliances only (RSE30P, RSE30PB)

- Do Not Cook on a Broken Cooktop - If the cooktop is broken, cleaning solutions and spillovers may seep through the cracks, posing a risk of electric shock. Contact a qualified technician immediately.

IMPORTANT INSTRUCTION

- Clean Cook-Top With Caution. Do Not clean cooktop when it's hot. - If a wet sponge or cloth is used to wipe spills on a hot cooking area, be careful to avoid steam burn. Some cleaners can produce noxious fumes if applied to a hot surface.

INSTALLATION

2.1 Important note to the installer

- Read all installation instructions included in this manual before installing the appliance.
- Remove all packing materials from the appliance before connecting it to the electric and/or gas supply.
- Adhere to all governing codes and ordinances during installation.
- Install the anti-tip device to the wall/floor. Verify the anti-tip device has been properly installed and engaged with the back of the appliance.
- Leave these instructions with the consumer for future reference.
- Important - Save for local electrical inspector's use.

2.2 Clearances and dimensions

- Provide proper clearance between the appliance and adjacent combustible surfaces. These dimensions must be met for safe use of the appliance.
- The location of the electrical outlet and gas pipe opening may be adjusted to meet specific requirements.
- Seal any openings in the wall behind the appliance and in the floor under the appliance.
- If there is a cabinet above the appliance, install a noncombustible material on the bottom if that cabinet in accordance with local codes or, in the absence of local codes, with ANSI Z223.1/NFPA 54 or, in Canada, CSA B149.1.
- With the spacers installed, the appliance may be placed against the back wall.

Clearances

Clearances for cooktops with a cabinet on top

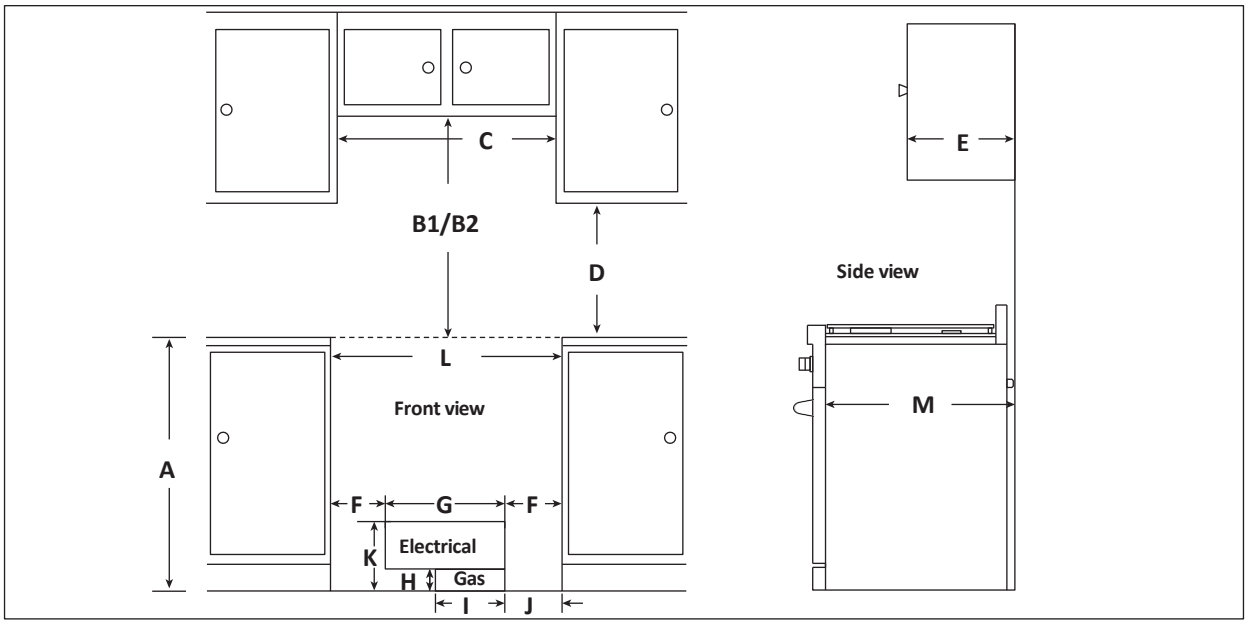

	RSG30P/ RSG30PB	RSE30P/RSE30PB
A	37" (93.9 cm)	
B1	min 30" (76.2 cm)	
B2	min 36" (60.9 cm)	
C	30" (76.5 cm)	
D	18" (45.7 cm)	
E	13" (33 cm)	
F	2" (5 cm)	
G	26" (66 cm)	
H	2" (5.1 cm)	-
I	3.6" (9 cm)	-
J	2" (5 cm)	-
K	max 6" (15.24 cm)	
L	30" (75.6 cm)	
M	24 " (60.9 cm)	

INSTALLATION

Legend	
A	Countertop height
B1	Minimum clearance above cooktop for unprotected cabinet bottom
B2	Minimum clearance above cooktop for protected cabinet bottom: Cabinet bottom has to be protected with no less than 6.4 mm thick flame retardant millboard covered with no less than No. 28 MSG sheet metal, 0.4 mm thick stainless steel, 0.6 mm thick aluminum or 0.5 mm thick copper.
C	Width of cabinet above cooktop
D	Clearance between cabinets and countertops
E	Cabinet depth
F	Clearance of the electrical component area from the side of the cabinet
G	Width of the electrical component area
H	Height of the gas connection area
I	Width of the gas connection area
J	Clearance of the gas connection area from the side of the cabinet
K	Recommended height of the electrical component area
L	Width of countertop cutout
M	Depth of countertop cutout

Clearances for cooktops with a hood on top

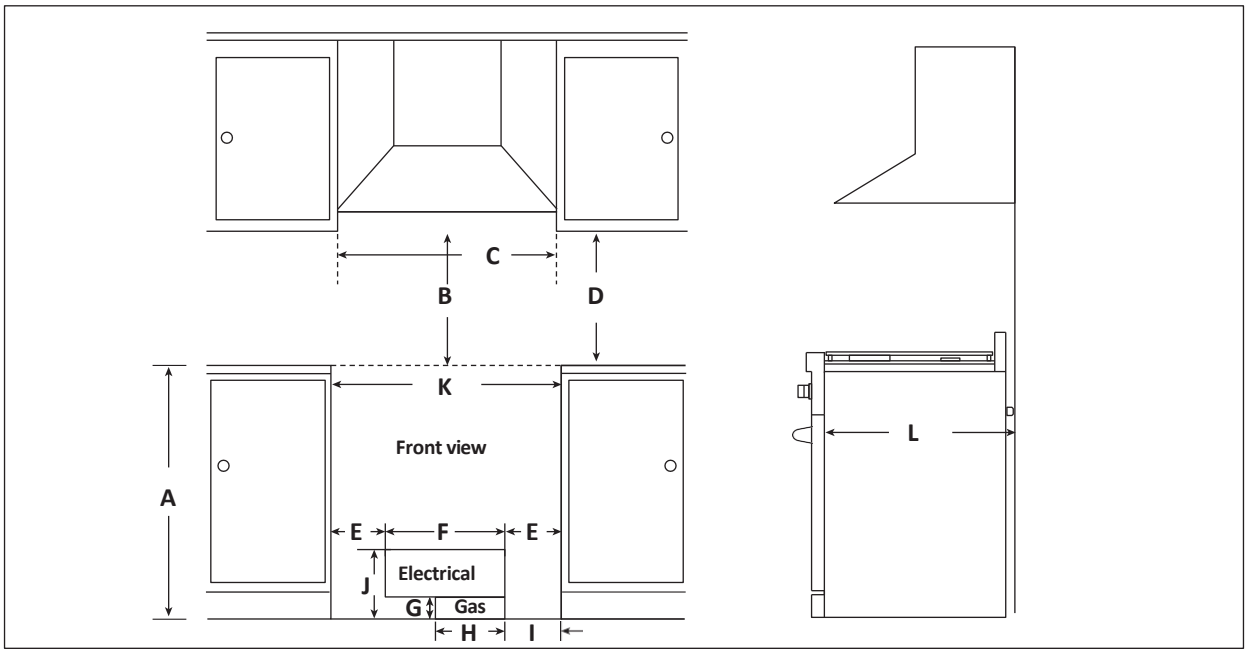

	RSG30P/ RSG30PB	RSE30P/RSE30PB
A	36" (91.4 cm)	
B	min 30" (76.2 cm)	
C	30" (76.2 cm)	
D	18" (45.7 cm)	
E	2" (5 cm)	
F	26" (66 cm)	
G	2" (5.1 cm)	-
H	3.6" (9 cm)	-
I	2" (5.1 cm)	-
J	max 6" (15.24 cm)	
K	30" (76.2 cm)	
L	24" (60.9 cm)	

Legend	
A	Countertop height
B	Minimum clearance above cooktop
C	Width of hood above cooktop
D	Clearance between cabinets and countertops
E	Clearance of the electrical component area from the side of the cabinet
F	Width of the electrical component area
G	Height of the gas connection area
H	Width of the gas connection area
I	Clearance of the gas connection area from the side of the cabinet
J	Recommended height of the electrical component area
K	Width of countertop cutout
L	Depth of countertop cutout

2.3 Install the handle

1. Attach door side brackets to both ends of the door handle.

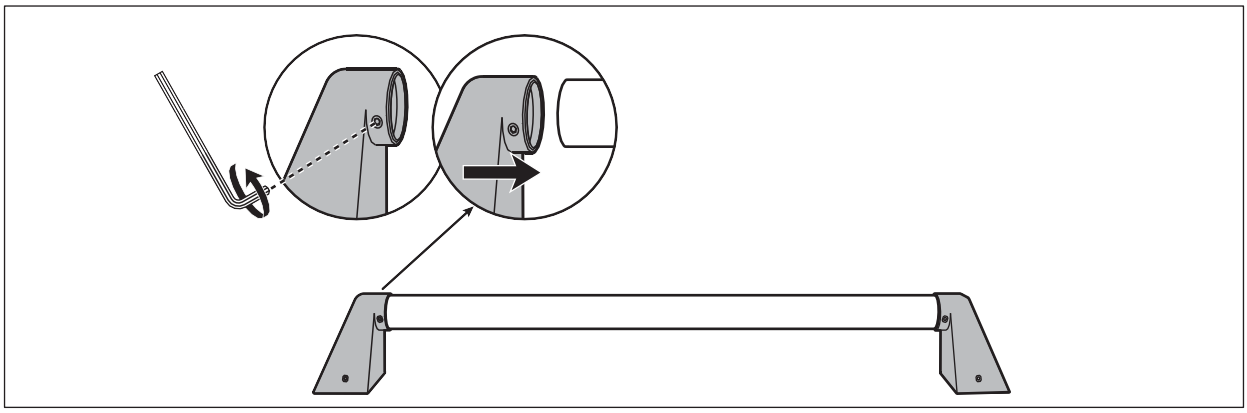

2. Place the assembled door handle onto the door pins on the oven door.

3. Tighten the pre-installed screws on the door side brackets with the hex key . Do not overtighten the screws.

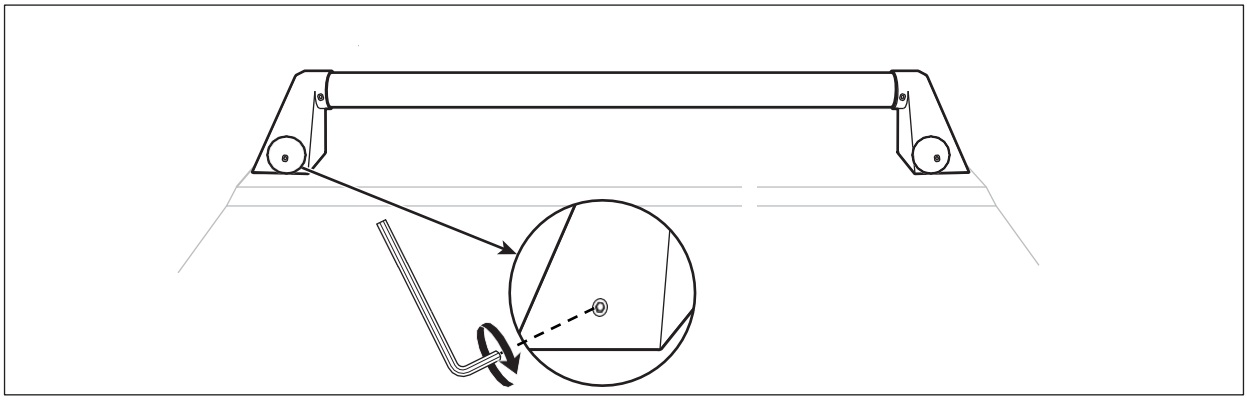

2.4 Attach/detach the oven door

NOTICE The oven door has multiple colors available (sold separately). Visit Thor kitchen website for further details.

- The oven door may be too big or heavy. It is recommended to have 2 people work together for attaching/detaching the oven door.
- Do not carry or hold the removed oven door by the door handle. It cannot support the weight of the oven door .

Detach

1. Fully open the oven door.
2. Unlock the hinge lock on both sides by rotating them fully towards the oven door.

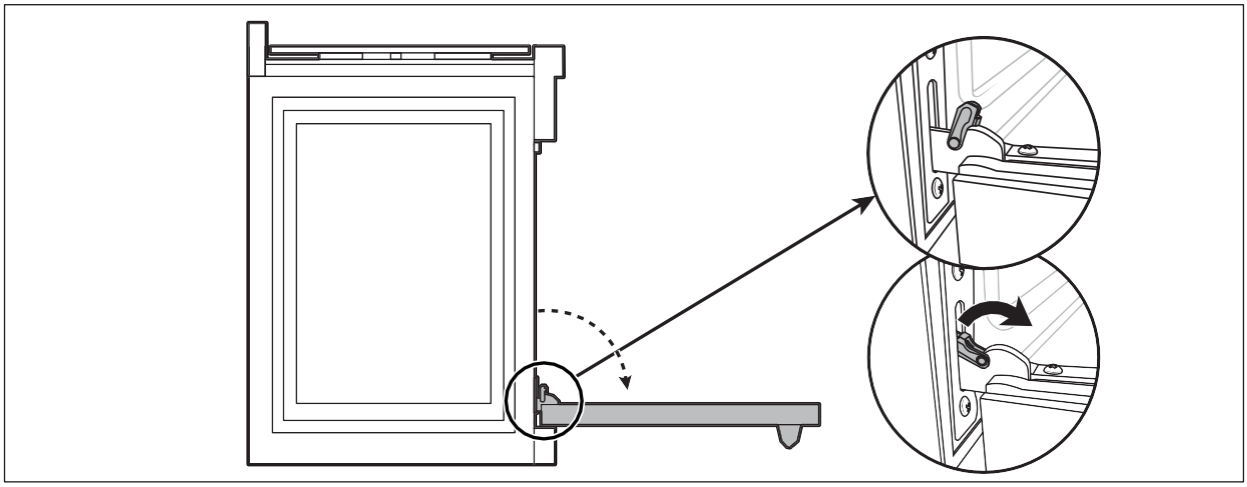

3. Firmly grasp both sides on the oven door.

4. Close the oven door until it is approximately at a 20° angle. When the oven door is at the correct angle position, the hinges arms release from the appliance.

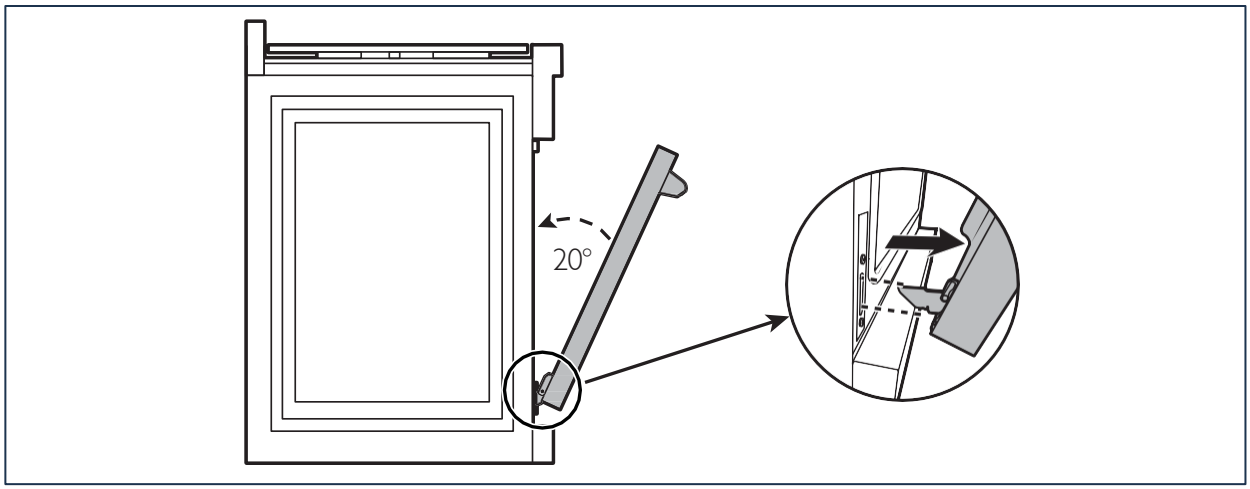

5. Take out the oven door by lifting it upwards and outwards.

Attach

1. Firmly grasp both sides on the oven door .
2. With the door at the same 20° angle as the detach position, slide the hinge arms into the bottom edge of the hinge slots on the appliance .

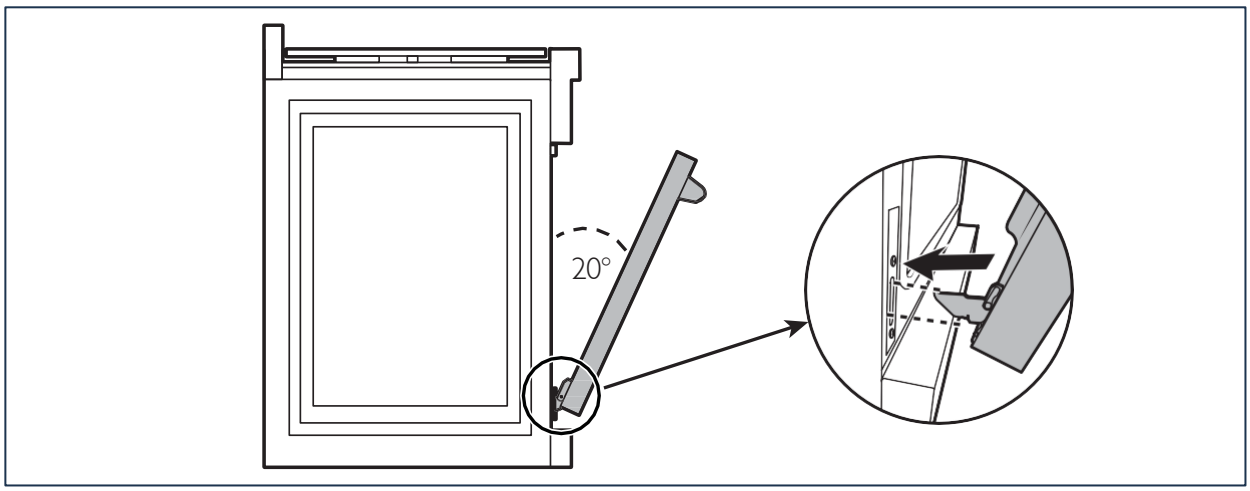

3. The notch in the hinge arms must be fully inserted into the bottom edge of the slots.
4. Open the door fully. If the door does not open fully, the hinge arms are not inserted correctly in the bottom edge of the hinge slots.

5. Re-engage the hinge locks, rotating them back toward the slots in the oven .

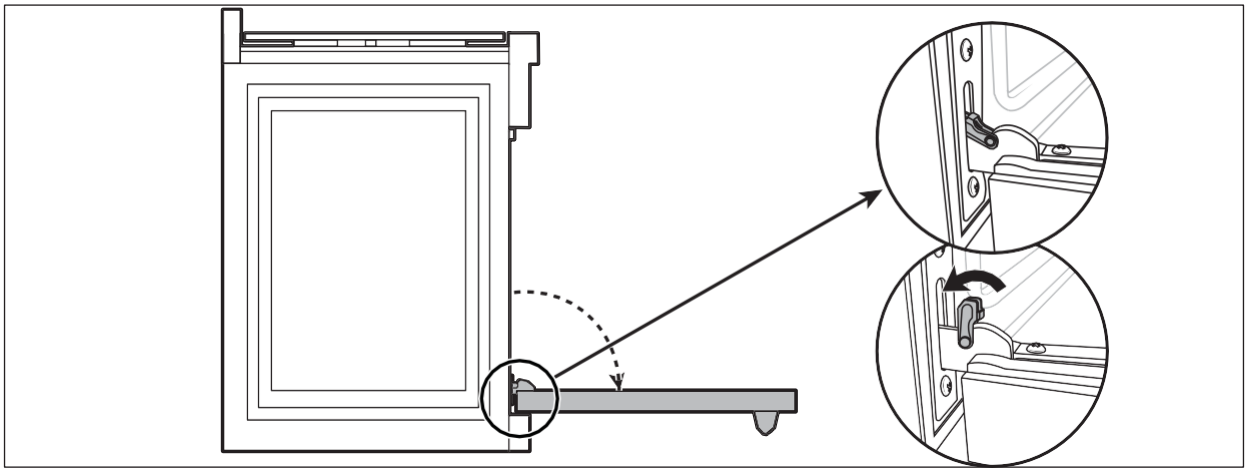

6. Close the oven door .

2.5 Attach/detach the kickplate

NOTICE The kickplate has multiple colors available (sold separately). Visit Thor kitchen website for further details.

Detach

1. Tilt the kickplate backwards to release it from the magnets.
2. Lift the kickplate upwards to unhook it from the sides .

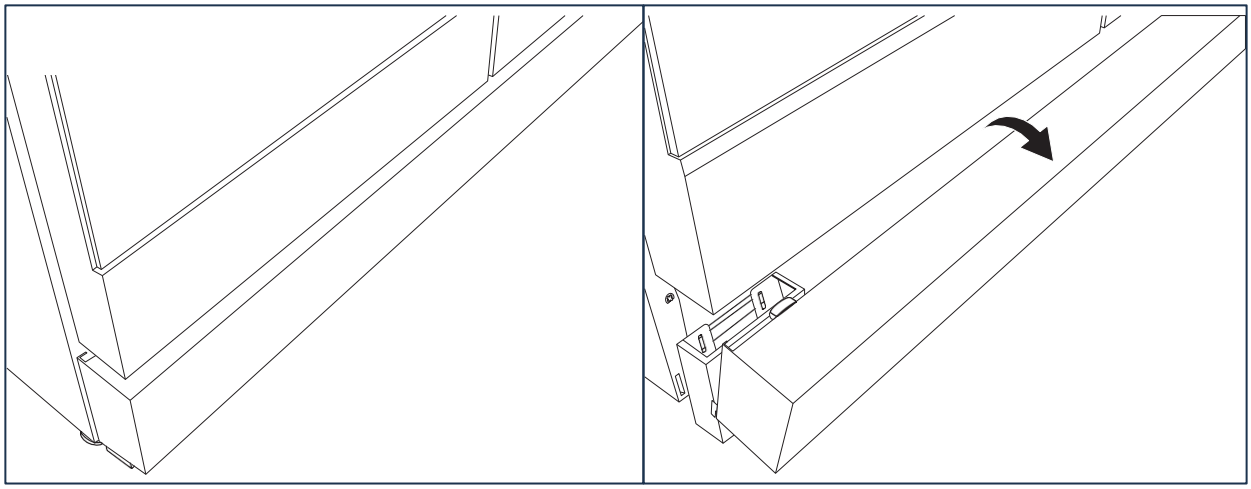

Attach

1. At a tilted angle, hook the kickplate to the slits on both sides of the appliance .
2. Rotate the kickplate upwards, the magnets snap it into place .

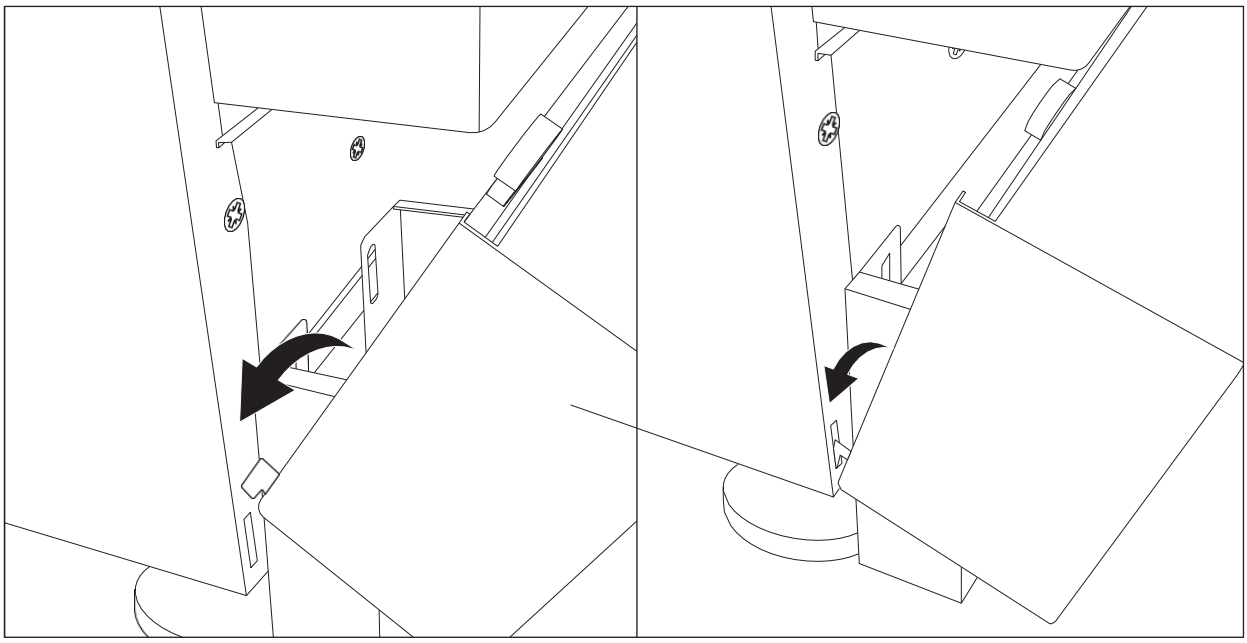

2 . 6 Installation for gas models (RSG30P/LP/RSG30PB/LP/RSG30PW/LP)

NG to LP gas conversion (RSG30P/LP/RSG30PB/LP/RSG30PW/LP)

The appliance is configured for use with NG gas as default. To convert the NG gas configuration to LP gas configuration, contact the local certified gas technician to complete the conversion. The LP conversion number for RSG models are:

- RSG30P: LPKRSG30P
- RSG30PB: LPKRSG30PB
- RSG30PW: LPKRSG30PW

Connect to a gas supply (RSG30P/LP/RSG30PB/LP/RSG30PW/LP)

- A manual shut-off valve has to be installed in an accessible location in the gas piping external to the appliance for the purpose of turning on or shutting off the gas supply to the appliance.
- During any pressure testing of the gas supply piping system at a test pressure equal to or less than 1/2 psi (3.5 kPa), isolate the appliance from the building's gas supply piping system by closing its individual manual shut-off valve.

Equipment required

- Cross-head screwdriver
- Flat-head screwdriver
- Pencil
- Measuring tape
- Adjustable wrench
- Pipe wrench x 2
- Spirit level
- Gas line shut-off valve
- Flex gas line rated for NG/LP (1/2" (1.2 mm) NPT x 1/2" (1.2 mm) I.D.) Must use a new flex gas line when installing a new appliance.
- Flare fitting for connection to gas supply line (1/2" (1.2 mm) NPT x 1/2" (1.2 mm) I.D.)
- Flare fitting for connection to pressure regulator on appliance (1/2" (1.2 mm) NPT x 1/2" (1.2 mm) I.D.)
- Liquid gas leak detector

Connect to gas supply

1. Must include a shut-off valve: Install a manual gas line shut-off valve in an easily accessible location. Do not block access to shut-off valve.
2. Connect the male pipe thread end of the 1/2" flare fitting adapter to the NPT of the pressure regulator inlet.

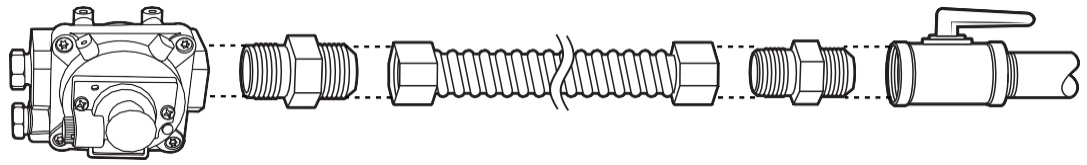

3. Install a male 1/2" flare fitting to the NPT internal thread of the manual shut-off valve.
4. Check the gas supply pressure required for the regulator setting:

	LP (Liquid Propane) in wc	NG (Natural gas) in wc
Appliance pressure regulator setting for outlet pressure	10.0	5.0

5. Connect the flex gas line to the gas inlet on the appliance and to the shut-off valve, positioning the appliance to allow for connection.

6. After making all necessary connections, conduct a leak test of the appliance according to the manufacturer's instructions (see the following chapter).

Gas leak test (RSG30P/LP/RSG30PB/LP/RSG30PW/LP)

- Leak testing of the appliance shall be conducted in accordance with these instructions.

1. Ensure that all appliance burner knobs are in the off position, and then turn on the main gas supply valve.
2. Use a liquid gas leak detector to check all gas connection joints and fittings for leaks in the system. Gas leaks may not be detected by smell alone. Never use an open flame to check for gas leaks.
3. Wipe off the liquid gas leak detector after the test.

2.7 Electrical connection for gas range (RSG30P/LP/RSG30PB/LP/RSG30PW/LP)

- This appliance must be supplied with the proper voltage and frequency, and connected to an individual properly grounded branch circuit, protected by a circuit breaker or fuse having amperage as specified on the rating label. The rating label is located on the right of the oven door .
- The outlet for the appliance should be located within the range of the appliance's power cord. Do not use an extension cord with this appliance.
- If the electrical service provided does not meet the above specifications, have a licensed electrician install an approved outlet.
- It is recommended to have the electrical wiring and hookup of the appliance connected by a qualified electrician. After installation, have the electrician explain where and how to locate and disconnect the appliance from power.

⚠ WARNING

Electrical Grounding Instructions

This appliance is equipped with a three-prong grounding plug for your protection against shock hazard and should be plugged directly into a properly grounded outlet. Do not cut or remove the grounding prong from this plug.

Connect the plug

1. Check that all burner knobs are at the OFF position.
2. Connect the plug to a suitable outlet. The control panel flashes once and a beep tone plays.

2.8 Electrical connection for electric range (RSE30P/RSE30PB/RSE30PW)

- This appliance must be supplied with the proper voltage and frequency, and connected to an individual properly grounded branch circuit, protected by a circuit breaker or fuse having amperage as specified on the rating label. The rating label is located on the right of the oven door.
- This appliance is manufactured ready to be installed with a single phase 4-wire power supply cord rated at 240 Volt, 50 Amps, rated at 194 °F (90 °C).
- This appliance can only be plugged into a standard 14-50R wall receptacle, Be sure the wall receptacle is within reach of range's final location.
- It is recommended to electrically ground the appliance during installation in accordance with local codes or, in the absence of local codes, with NFPA 70 or CSA C22.1.
- If the electrical service provided does not meet the above specifications, have a licensed electrician install an approved outlet.
- It is recommended to have the electrical wiring and hookup of the appliance connected by a qualified electrician. After installation, have the electrician explain where and how to locate and disconnect the appliance from power.
- Effective January 1,1996, the National Electrical Code requires that new constructions (not pre-existing) utilize a 4-conductor connection with an electric appliance. When installing an electric appliance in new construction, follow the **4-wire connection** section of this chapter.
- The outlet for the appliance should be located within the range of the appliance's power cord. Do not use an extension cord with this appliance.

Equipment required

- Cross-head screwdriver
- 3 or 4 prong UL or CSA International Certified power cord (rated at 240 Volt, 50 Amps)

4-wire connection

1. Loosen the screws on the terminal block cover and set the screws aside for later use.
2. Identify the corresponding terminals on the terminal block for each power cord wire: live (L1), live (L2), neutral (N), and ground (G).

3. Remove the 4 lower terminal screws from the terminal block.

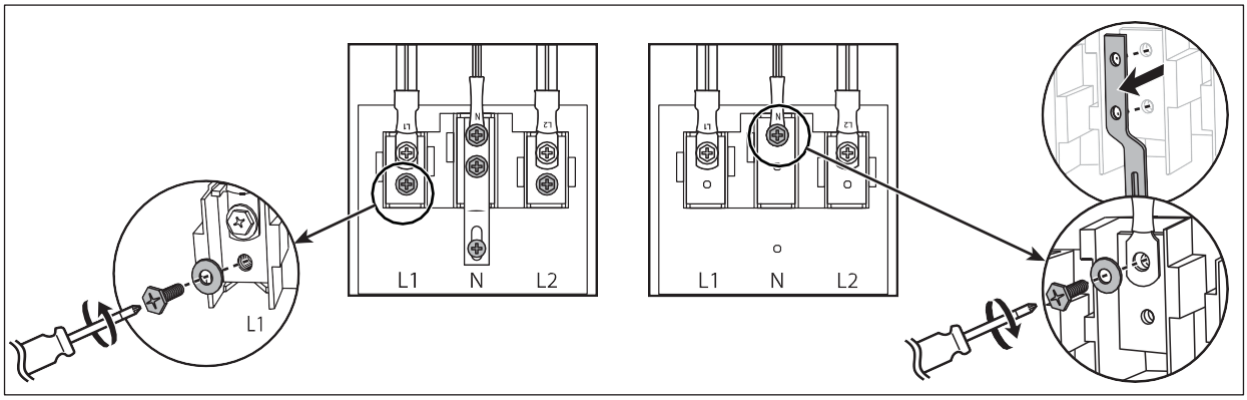

4. Remove the 2 upper screws of the neutral (N) terminal and take out the grounding strip.
5. Re-tighten the 2 upper screws of the neutral (N) terminal .

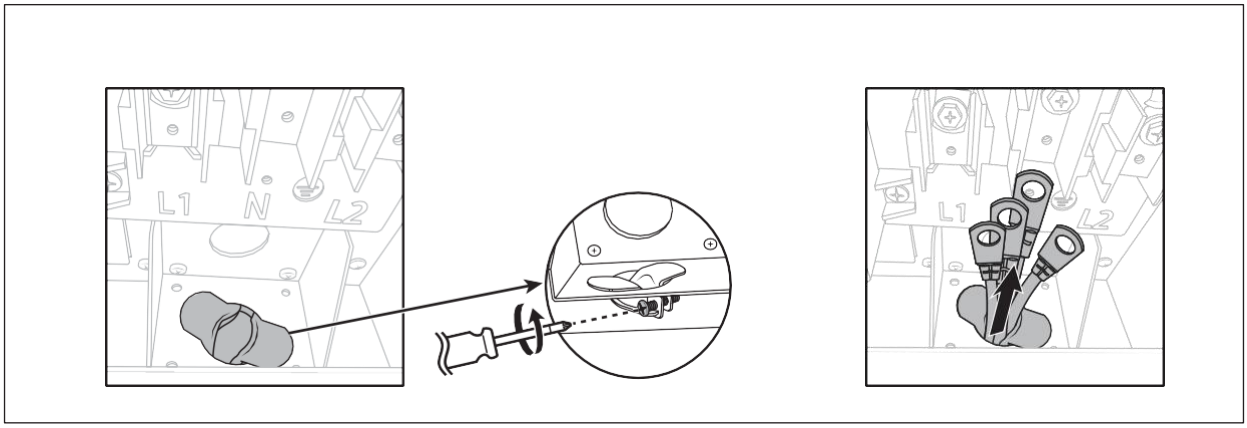

6. Loosen the screws on the strain relief .
7. Extend the power cord wire upwards through the strain relief from the bottom of the back panel .
8. Hook the ring terminals of the power cord wire into their designated terminals on the terminal block (e.g., live 1/2, neutral, and ground) and tighten the screws securely .

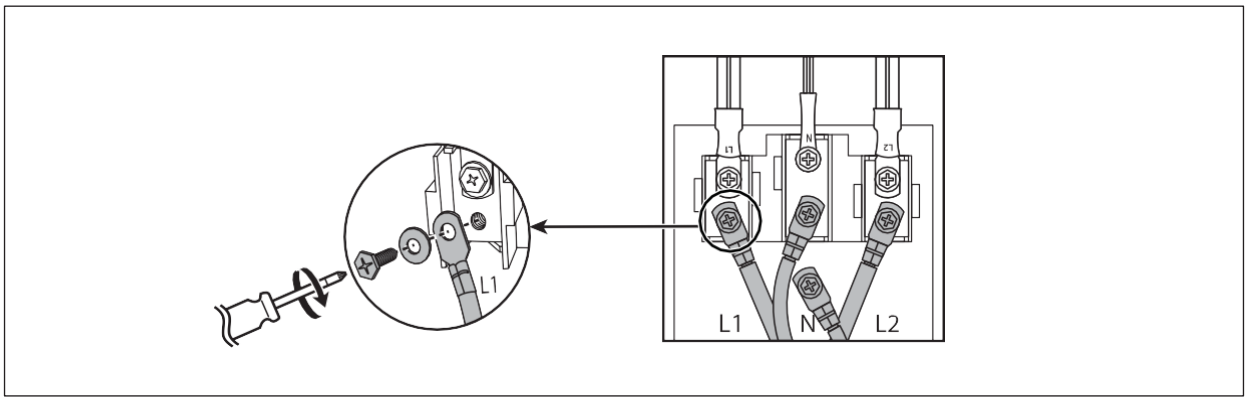

9. Ensure the ring terminals have good contact with the terminals on the terminal block .
10. Slightly push the power cord upwards to leave some slack above the strain relief , then tighten the screws on the strain relief .
11. Reinstall the terminal block cover and re-tighten the screws.

3-wire connection

1. Loosen the screws on the terminal block cover and set the screws aside for later use.
2. Identify the corresponding terminals on the terminal block for each power cord wire: live (L1), live (L2), and neutral (N).
3. Remove the 3 lower terminal screws (L1, L2, and N) from the terminal block .

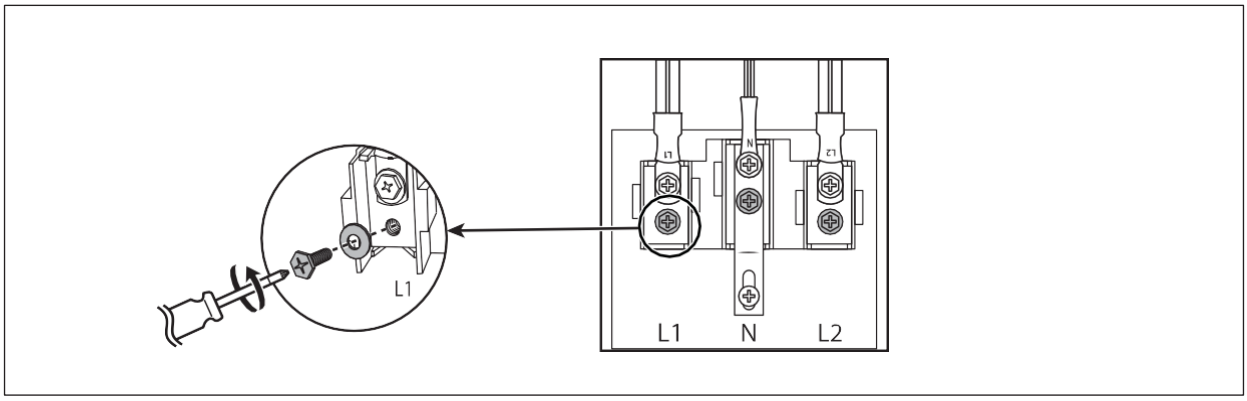

4. Loosen the screws on the strain relief .

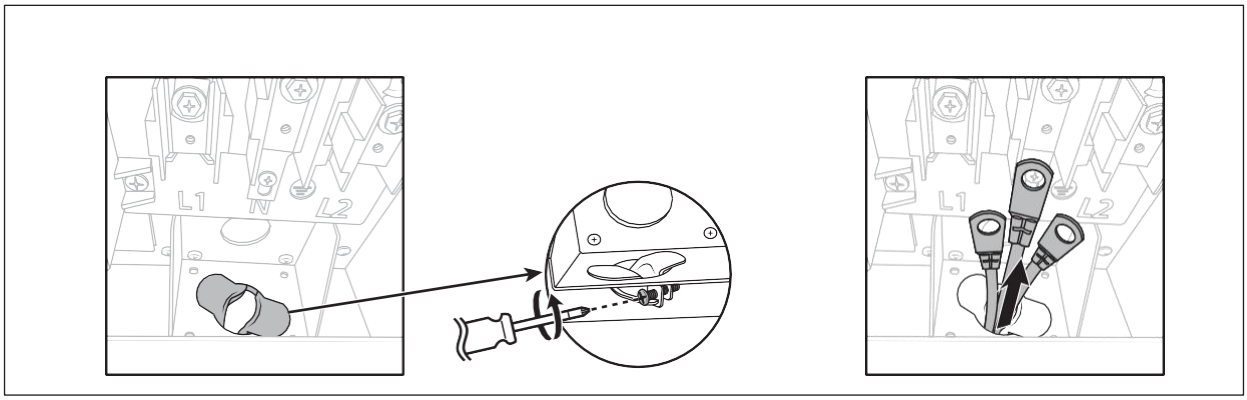

5. Extend the power cord wire upwards through the strain relief from the bottom of the back panel.

6. Hook the ring terminals of the power cord wire into their designated terminals on the terminal block (live 1/2 and neutral) and tighten the screws securely .

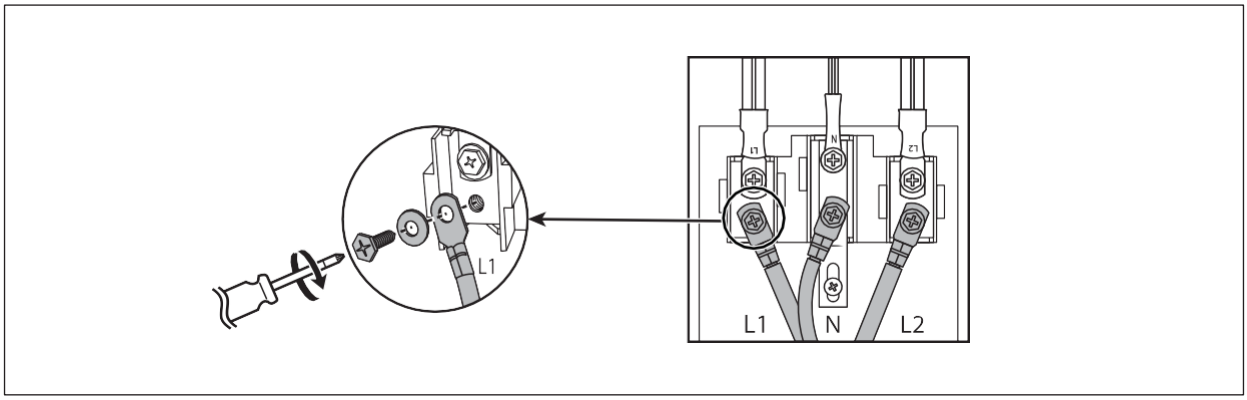

7. Ensure the ring terminals have good contact with the terminals on the terminal block.
8. Slightly push the power cord upwards to leave some slack above the strain relief , then tighten the screws on the strain relief .
9. Reinstall the terminal block cover and re-tighten the screws.

Connect the plug

1. Check that all burner knobs are at the OFF position.
2. Connect the plug to a suitable outlet. The control panel flashes once and a beep tone plays.

2.9 Install the back spacers

1. Locate the 2 spacer holes at the back of the appliance
2. Attach the spacers with the spacer screws.

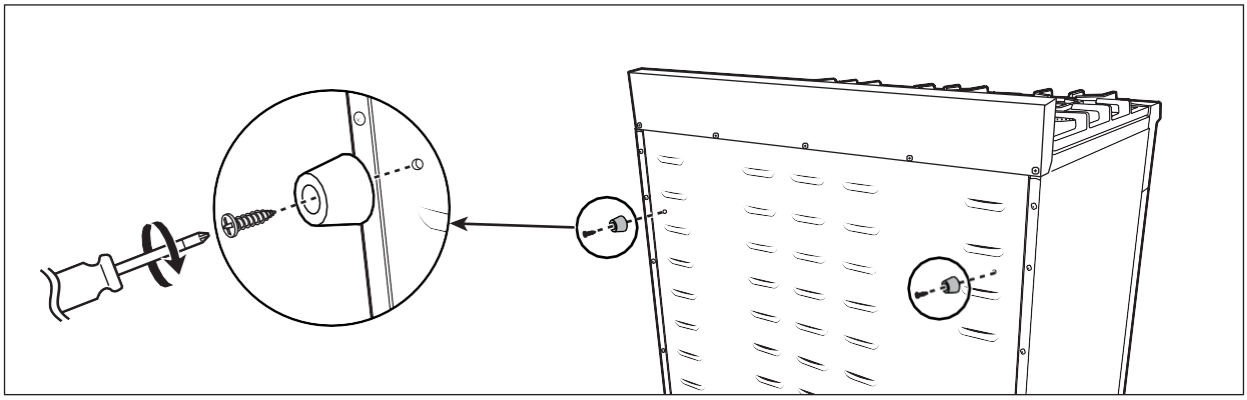

2.10 Install anti-tip device

⚠ WARNING **Risk of injury!**

- A child or adult can tip the appliance and be killed.
- Install the anti-tip device to the wall/floor. Verify the anti-tip device has been properly installed and engaged with the back of the appliance.
- Engage the appliance to the anti-tip device by pushing the appliance all the way into the installation location. Ensure the anti-tip device is re-engaged when the appliance is moved.
- Re-engage the anti-tip device if the appliance is moved. Do not operate the appliance without the anti-tip device in place and engaged.
- See installation instructions for details.
- Failure to do so can result in death or serious burns to children or adults.
- Even after the anti-tip device is installed, do not step, lean or sit on the oven door or place any heavy objects on it.

CAUTION **Risk of damage!** Do not drill into any pipes or power lines beneath the surface while preparing the mounting holes for the anti-tip device. Use a voltage/metal detector before drilling any holes to eliminate any such potential risks.

Equipment required

- Power drill
- Pencil
- Spirit level
- Measuring tape

For RSG30P/LP/RSG30PB/LP/RSG30PW/LP

1. Place the anti-tip device on the floor, on the right side of the installation area.
2. Test the fit of the anti-tip device by pushing the appliance into place. Ensure that the anti-tip device catches onto the back right foot of the appliance.
3. Once the correct placement is verified, pull out the appliance and mark the holes on the anti-tip device onto the floor .
4. Put away the anti-tip device and drill holes on the marked positions .
5. Attach the anti-tip device to the floor using the provided anti-tip device screws.
6. Push the appliance all the way into the installation location, engaging it firmly with the anti-tip device .

For RSE30P/RSE30PB/RSE30PW

1. Measure the height between the floor and the left side of the back panel.
2. Mark this measurement on the back wall .
3. Place the anti-tip device against the wall and mark the holes on it, ensuring they are level.
4. Drill holes on the marked places .
5. Attach the anti-tip device to the back wall using the provided screws .
6. Push the appliance all the way into the installation location, engaging it with the anti-tip device.

Check the installation of the anti-tip device

1. Remove any items on the cooktop.
2. Grasp the top rear edge of the appliance and carefully attempt to tilt it forward.
3. Verify that the anti-tip device is engaged.

2.11 Perform a test run

Check burner ignition (RSG30P/LP/RSG30PB/LP/RSG30PW/LP)

1. Select a burner knob and simultaneously push in and turn to the **Ignite** position. A clicking sound indicates proper ignition operation.
2. The burner should ignite within 4 seconds once the air is purged from the supply lines. After ignition, rotate the burner knob out of the **Ignite** position.
3. Visually check the combustion quality of the flames:

Flame appearance	Description	Verdict
	Yellow flames	Call for service to adjust the flame
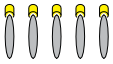	Yellow tips on the outer cones	Normal for LP
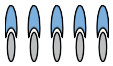	Soft blue flames	Normal for NG

4. Test each burner one by one until all burners have been checked.

2.12 Conditioning prior to first time use

Conditioning burns off any manufacturing residues.

1. Place all the oven racks inside the oven cavity .
2. If a hood is installed, set it on high.
3. Turn on the oven knob to 350 °F (176 °C) and allow it to heat for 30 minutes, then increase the temperature to 500 °F (260 °C) then allow oven to heat for another 30 minutes.
4. Let the oven cavity cool down.
5. Once cooled, wipe the oven cavity with a damp cloth and mild detergent, then dry thoroughly.

TROUBLESHOOTING

Problem	Possible cause	Solution
The appliance is not level.	The appliance has been installed improperly.	Place the oven rack in the center of the oven. Place a level on the oven rack . Adjust the feet until the oven rack is level. Ensure the floor is level and strong and stable enough to adequately support the appliance.
	The floor is sagging or sloping.	Contact a carpenter to correct the situation.
	The kitchen cabinets are not properly aligned and make the appliance appear to be not level.	Ensure the cabinets are square and provide sufficient room for installation.
The appliance must be accessed for servicing and cannot be moved easily.	The kitchen cabinets are not square and too close to the appliance.	Contact a builder or installer to make the appliance accessible.
	Carpet is interfering with movement of the appliance.	Provide sufficient space so the appliance can be lifted over the carpet.

WARRANTY

THOR KITCHEN®

Warranty&Service

This appliance has been manufactured by Thor International, 10830 Ada Ave, Montclair, CA 91762

For Customer Service, please call (877) 288 - 8099

For the most up to date warranty and service policy, please refer to our website
WWW.THORKITCHEN.COM/WARRANTY-REGISTRATION

For in-warranty service requests, please visit our website at
WWW.THORKITCHEN.COM/SERVICE

Please Note: You must provide proof of purchase or installation date for any in-warranty service requests

We Stand Behind the Quality of Our Appliances.

Reliability and customer satisfaction are our top priorities. We offer a solid two-year warranty on both parts and labor. Enjoy professional-grade performance with the confidence that we've got you covered.

Warranty Registration Made Easy.

01 Scan the QR Code or visit thorkitchen.com/register-your-product.

02 Input your purchase and product information and select register.

03 That's it. You're all set. Enjoy!

Questions: service@thorinternational.com

WARRANTY

PARTS